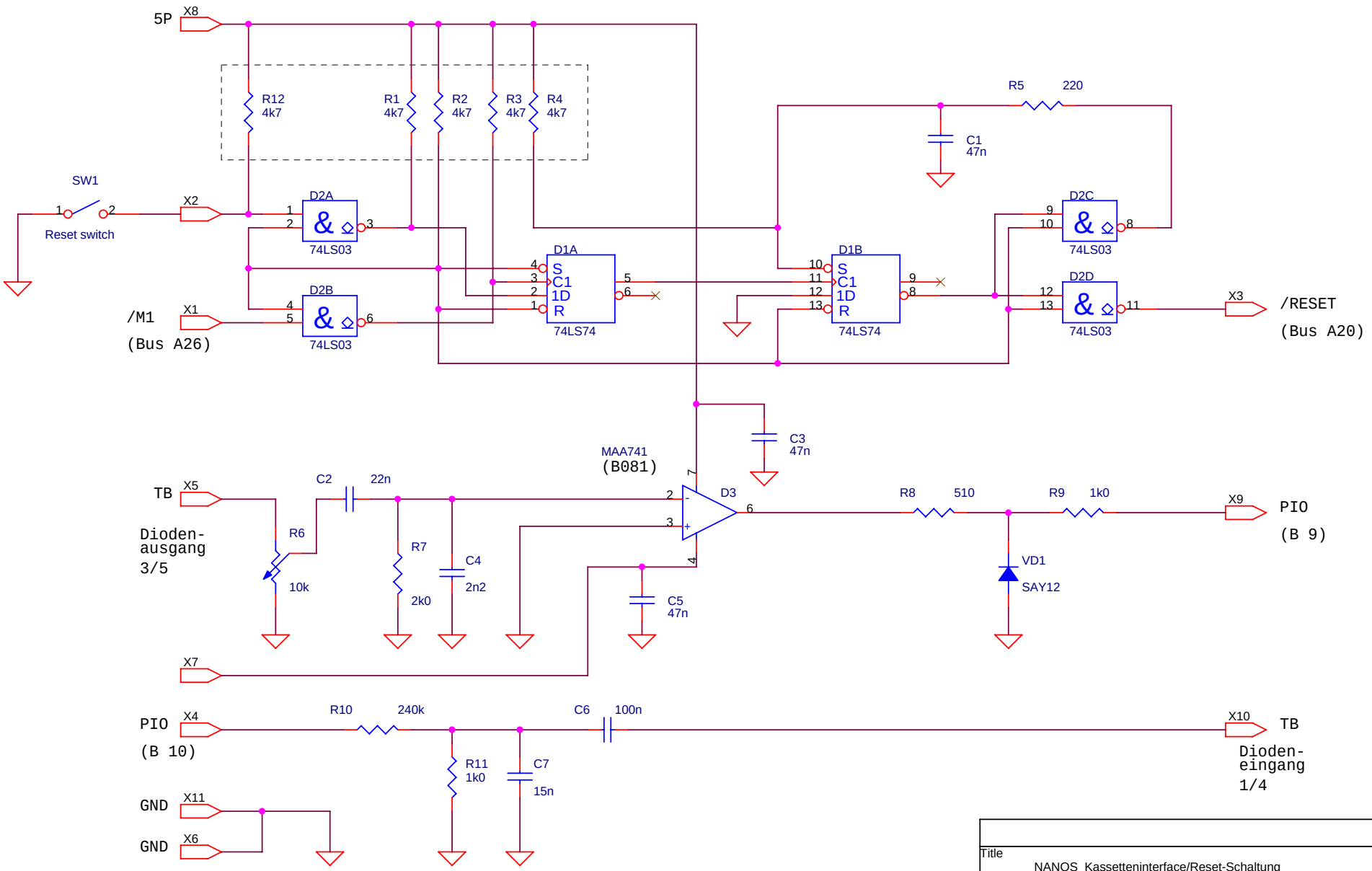

Title	NANOS Kassetteninterface/Reset-Schaltung	
Size A4	Document Number R-223-101 / 060 Sp(4)	Rev 0.1
Date: Tuesday, July 22, 2008	Sheet 1 of 1	